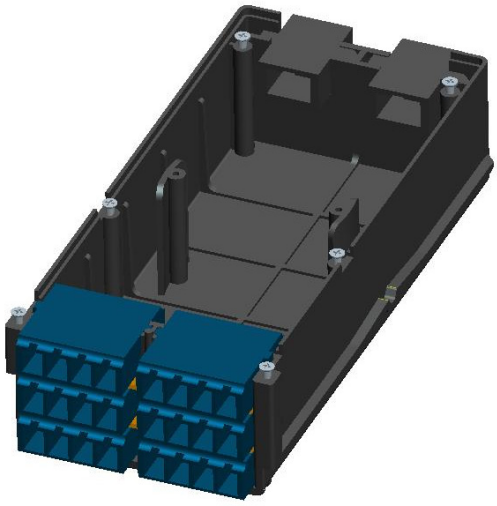

HDCi
High Density Converged Infrastructure

HDCi® MLX3 MPO/MTP® Cassette Module

HDCi® MPO/MTP® cassette modules designed and manufactured for the transition between MPO/MTP® and standard LC or SC connectors. They can be mounted on 1U, 2U, 3U or 4U 19" rack mounted chassis.

These cassette modules are used to interconnect MTPMPO backbone cabling with LC or SC patching. They contain factory tested and terminated MPO/MTP® to LC fanouts with low loss and reliable results.

The HDCi® MLX3 MPO/MTP® modules which are compatible with LX3 panel are designed for the transition between MPO/MTP® and standard LC connectors. They have a small form factor design. They come with 6 low loss LC quad or SC Duplex flangeless adaptors on the front and 2 MTP® on the back side. They contain 100% factory terminated and tested LC or SC to MTP® fanouts.

The combination of LX3 panel and MLX3 cassette modules is an ideal solution for high density applications. Their plug and play design meets all requirements for rapid deployment in high demand data centre environments.

Features

- MPO/MTP® multi-fibre connector
- Low loss zirconia sleeve LC or SC adaptors
- Available with OM3, OM4, OS1/OS2 fibre types
- 12 and 24 fibre versions with 6 low loss LC Quad or SC Duplex
- Option for A, B or C polarity
- 100% factory terminated and tested
- High density solution – Up to 576 LC connectors in 4U chassis
- Saves installation and reconfiguration time

Applications

- Data Centers
- Parallel optics applications
- Storage Area Network - Fibre Channel

Specifications

ELEMENT	CHARACTERISTIC
Fibre	OS1/OS2, OM3, OM4 (ISO/IEC 60793)
Fibre Count	12, 24
Polarity	A (default), B or C
MTP Adaptors	US Conec (IEC-61754 & EIA/TIA-604-5) **Body Colour**: Black **Polarity:** A/C - Keyway up - Key way down **Body Colour**: Grey **Polarity:** B - Keyway up- Keyway up
LC Adapter	**Body Colour**: Aqua (MM)(OM3/OM4), Blue (SM/UPC), Green (SM/APC) **Sleeve Material**: Zirconia
Terminations	MTP® Standard (12 Fibre Ferrule) MTP® Low Loss Elite (12 Fibre Ferrule) LC Standard LC Low Loss Premium
Storage Temperature	-20 ~ +60°C
Installation Temperature	-20 ~ +60°C
Operating Temperature	-20 ~ +60°C
Size	136*61*36mm

MTP® Connector Performance

CONNECTOR MATING	IL AVERAGE	IL MAX	RETURN LOSS
MTP® Elite (MM)	0.10dB	0.35dB	N/A
MTP® (MM)	0.20dB	0.60dB	N/A
MTP® Elite (SM)	0.10dB	0.35dB	>60dB
MTP® (SM)	0.25dB	0.75dB	>60dB

LC Connector Performance

OPTICAL PERFORMANCE*	MULTIMODE	SINGLEMODE	CONFORMANCE
Insertion Loss	≤0.20dB	≤0.20dB	IEC 61300-3-4
Return Loss	-	≥50dB	IEC 61300-3-4

Standards Compliance

- TIA/EIA-568-C.3 and ISO/IEC 11801 - cable
- IEC-61754-7 & EIA/TIA-604-5 - MPO/MTP®
- Compliant to Directive 2002/95/EC (RoHS) and REACH SvHC
- IEC-61754-20 (LC) & IEC-61754-14 (SC)
- IEC-60793

Ordering Information

CMLX3
HDCi® MLX3 MPO/MTP® Cassette Module

Connector Mating	
20	Standard
24	Elite

Connector Type	
00	LC
02	SC

Fibre Type	
9	OS1/OS2
3	OM3
4	OM4

Adaptor Configuration	
46	LC Quad
26	SC Duplex

+

Polarity	
A	Polarity A (default)
B	Polarity B
C	Polarity C

Example:

CMLX3-2000346-A – LC to MTP® Male MLX3 HDCi® Cassette Module with 6 LC Quad OM3 Aqua Adaptors Polarity A

Technical Drawing

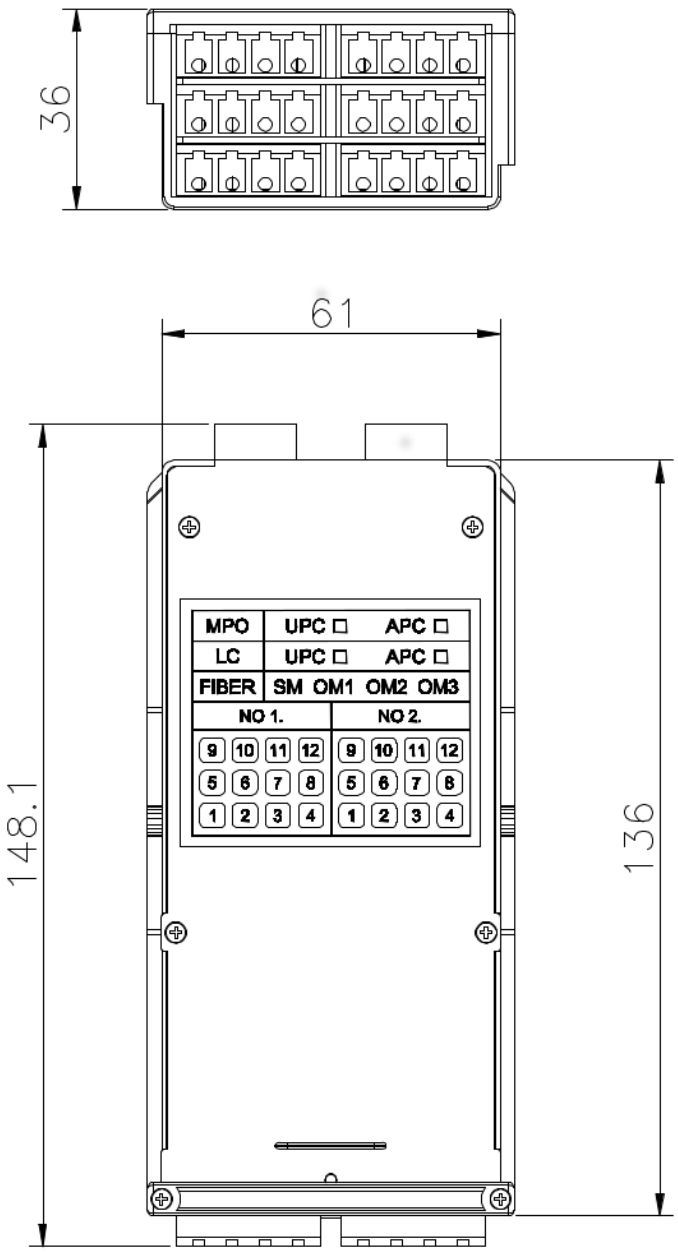

Additional Images

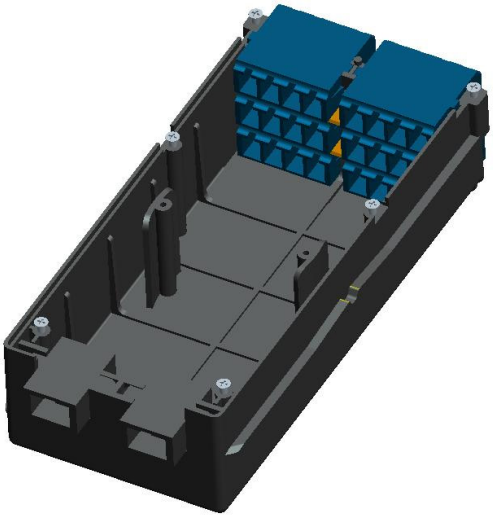

MTP® is a registered trademark of US Conec Ltd.